DECOLAV®

Spec Sheet

Model No. 1025T WH

Product Description

Tempered Ring Artistic Glass Vessel

- Translucence™ Collection
- 12mm Glass
- 17” Round
- Tempered Natural Glass
- For Above Counter Use
- White Natural

Roughing-in Dimensions

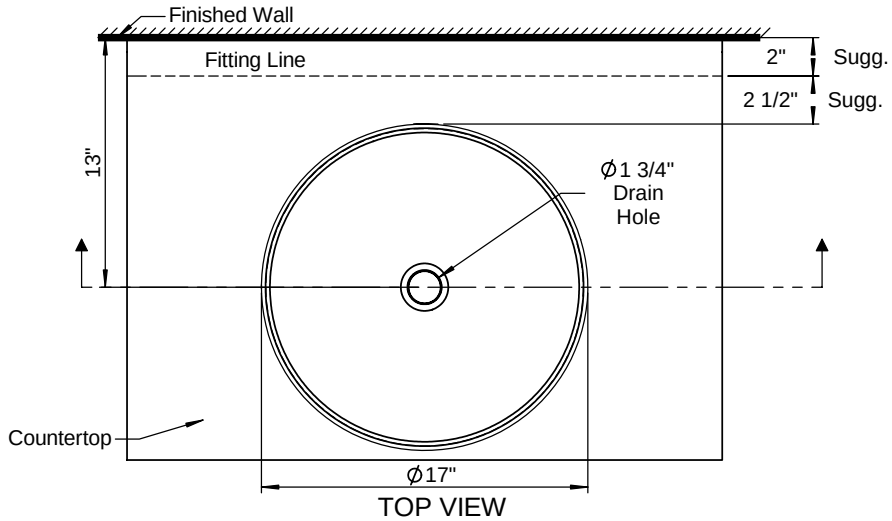

TOP VIEW

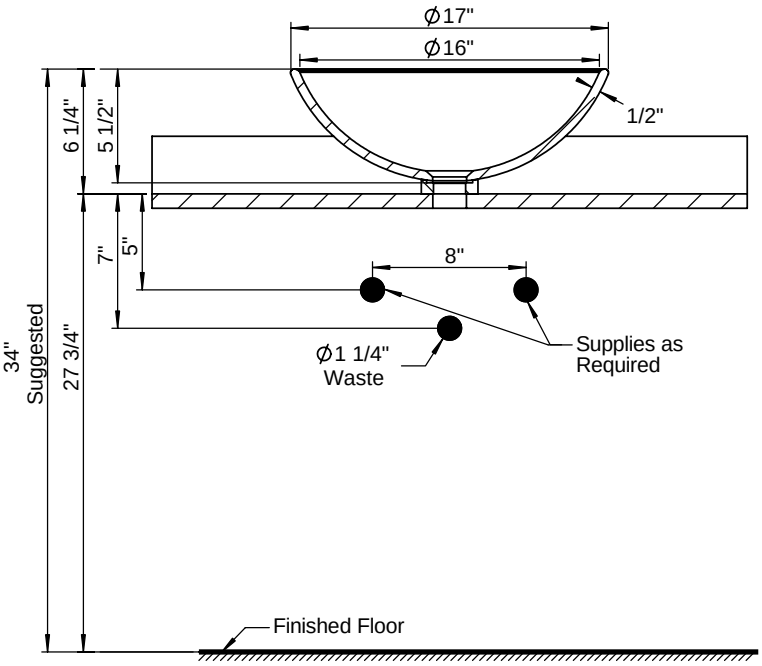

FRONT VIEW

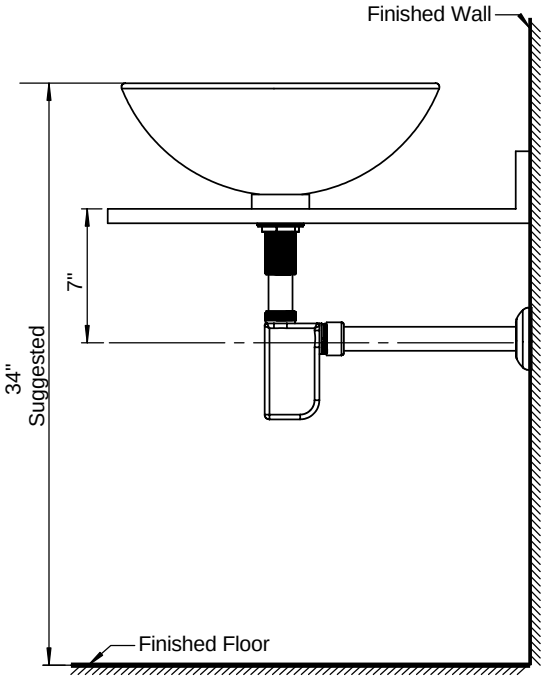

SIDE VIEW

Customer Service
561-274-2110
www.decolav.com